TOTO®

FBY1415LP

Enameled Cast Iron Bathtub

FBY1415LP - Cast Iron Bathtub

- 53-13/16" x 30" x 14-3/4"
- Cast iron construction provides years of durability
- Slip-resistant surface
- Lifetime limited warranty

FBY1415LP

Enameled cast iron apron bathtub. Left hand. Slip-resistant surface. Lifetime limited warranty.

Colors:

Standard	*#01 Cotton*
	#12 Sedona Beige
Optional	*See price book for additional colors*

DISCONTINUED

FBY1415LP
Enameled Cast Iron Bathtub

SPECIFICATIONS

Size: 53-13/16"L x 30"W
Height: 14-3/4"
Warranty: Lifetime Limited Warranty
Material: Enameled Cast Iron

Shipping Weight: **FBY1415LP**
309 lbs.

Shipping Dimensions: **FBY1415LP**
56-11/16"L x 32-7/8" W
x 18-1/2"H

Fixture dimensions meet ANSI/ASME standard A112.19.1 and CAN/CSA B 45 requirements.

Listing / Approvals: IAPMO/c-UPC, CSA, and others.

Meets the American Disabilities Act Guidelines and ANSI A117.1 requirements where installed so top of seat is 19" from the finished floor. Recommended seat for ADA requirements: TOTO model #SS114.

These dimensions and specifications are subject to change without notice.

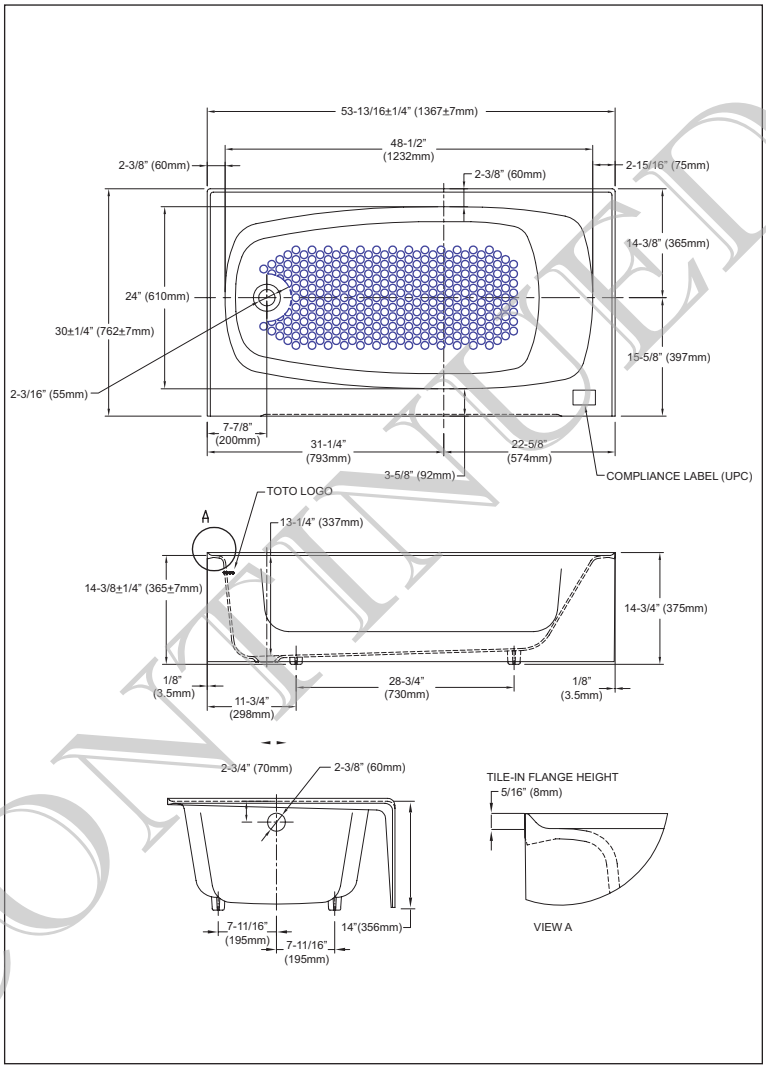

FBY1415LP - Cast Iron Bathtub

DISCONTINUED

TOTO®
TOTO U.S.A., INC. • 1155 Southern Road, Morrow, GA 30260
Tel. (770) 282-8686 • Fax. (770) 282-8701 • www.totousa.com
Printed in U.S.A. © TOTO LTD. 11/08 #D50012

Printed on recycled paper

REV 11/08